□□□□ □□□□ □□□ □□□ □□□□ □□ □□□ □□□□□□ □□□ □□ □□□

□□□

1)□ □□□□□□

Full Length
87.5 cm
34.4 inch
16 cm
6.3 inch
3.7 cm
1.5 inch
5.7 cm
2.2 inch

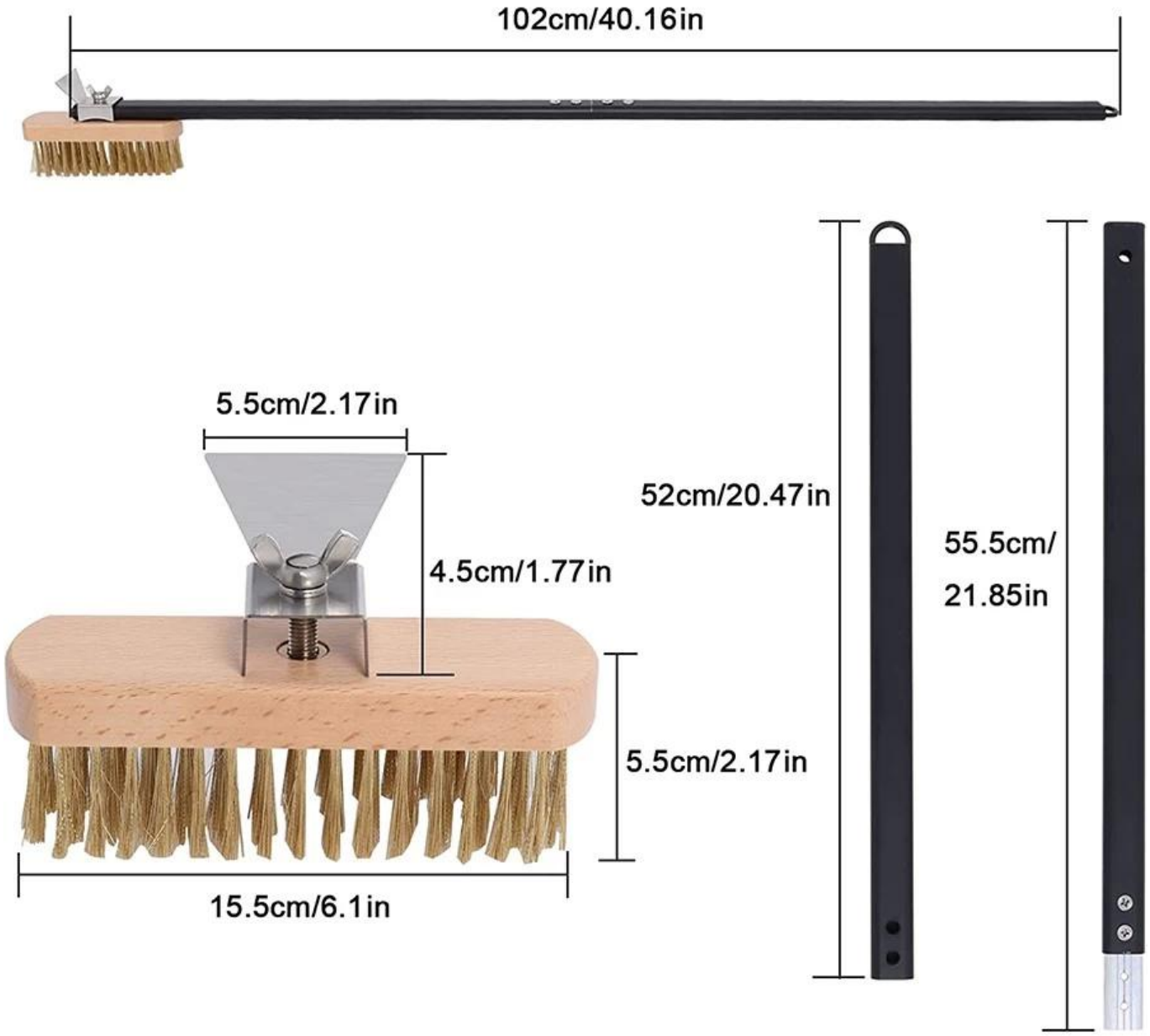
102cm/40.16in
5.5cm/2.17in
4.5cm/1.77in
5.5cm/2.17in
15.5cm/6.1in
52cm/20.47in
55.5cm/
21.85in

□□□□□□□:

1. □□□□□□□□□□□□□?
□□□□□□□□□□□□□□□□□□□□□□□□□□□□□□

□□□□□□□□□□□□□□□□

2. □□□ OEM □□□□□□□□□□□□?
□□□□□□OEM□□□□□□□□□□□□□□□□

3. □□□□□□□□□□□□□□□□□□□□□?
□□□□□□□□□□□□□□□□ □□□□□□□□□□□□□□ □ □□□□□□□□□□□□□□□□□□□□

4.□□□□□□□□□□□□

□□□□□□□□□□□□□□15-25□□□□□□□□□□□□□□